ALS Tire BLE

Install Guide

(18.06.2022)

V1.0 – Initial version

www.alsense.eu

Table of Contents

1. Introduction

Thank you for purchasing the ALS Tire BLE. The following guide is aimed at providing an overview of the typical install process and configuration steps.

2. Specifications

SENSOR	Number of Channels	3 (3 default)
	Sample Rate	1-10Hz (10Hz default)
	FOV	110°
	Battery	250 mAh (built-in charger)
	Autonomy	15 hrs (track use)
	Dimensions	64 x 42 x 17.5 mm
	Accuracy	1°C
	Emissivity	0.01 – 1 (0.75 default)
	IP Rating	IP65

3. Quick Install

a. Initial Setup

First step after receiving the product is putting the sensors on charge using the supplied cables and any USB adapter (including external batteries).

b. Configuration

Full information on configuring the parameters of the units can be found in section **Configuration**

c. Power-up

The system can now be powered up. To power up the device remove it from the magnetic enclosing. Once removed the device automatically boots up, the STATUS LED on the device should turn blue and, after the initialization period passes, it switches off. This signals that the device is ready for transmitting data over BLE.

d. Sleep Mode

The device will be advertising itself on Bluetooth for 15 minutes, after this period if no connection is received then it will enter a sleep mode for 1 hour and then wake up and re-advertise. Any BLE connection to the device will reset this timer. The device will repeat this pattern until the battery is depleted. Use a magnetic override or pad to wake up the device if it has entered sleep mode(check the STATUS LED on wake-up to make sure the battery is not depleted).

4. Physical Installation

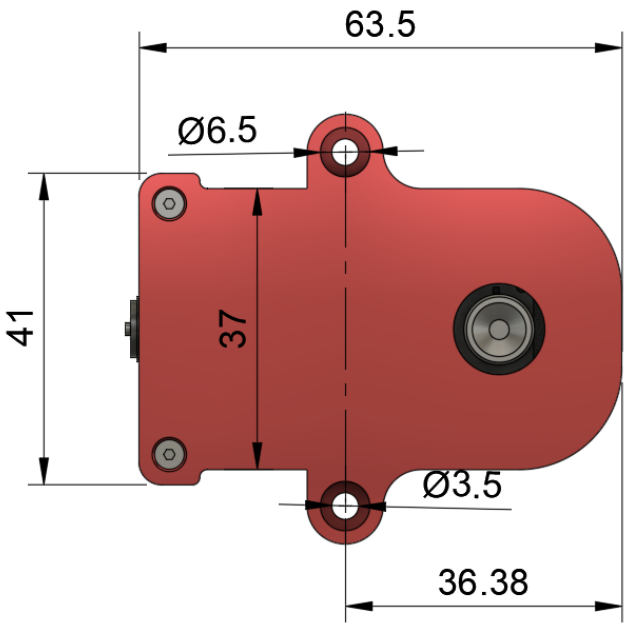

All dimensions in mm

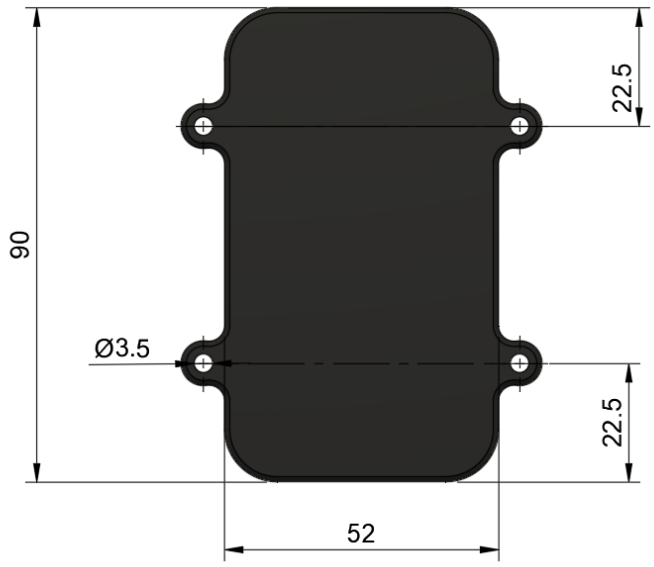

Figure 1 – Mounting (sensor – left, receiver – right)

The sensor should be mounted in its final position using the mounting holes situated on the sides of the housing. For temporary installs we've successfully used 3M Dual-Lock tape, but extra care should be employed when using such a solution.

We do recommend placing the sensor on the tire's leading edge (so as to not get hit by debris) and avoiding direct exposure to significant heat sources (i.e. exhausts).

The IR sensor has a horizontal FOV of 110°. As the sensor is placed further away, the maximum width of the tire increases. Please consult the table and the graph below or get in touch if you have any questions. Please consult 'Figure 2' in order to determine how to orient the sensor.

For best wireless range please ensure that the receiver and sensors are all oriented vertically.

Maximum Tire Width (mm)	Mounting Distance (mm)
100	35
150	52
225	79
250	88
275	96
300	105
350	123
400	140

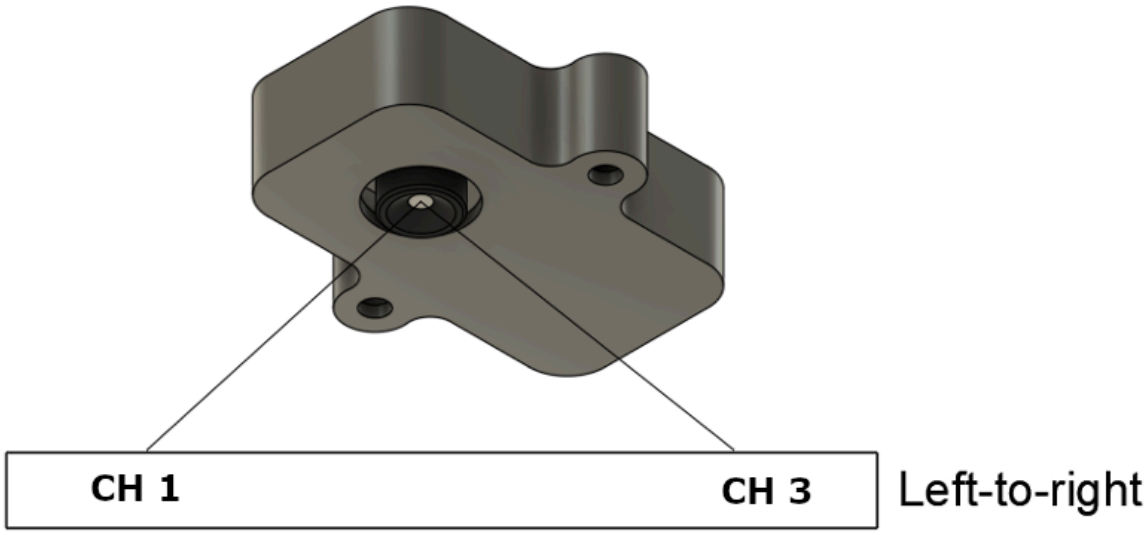

Figure 2 - Channel assignment / sensor data order

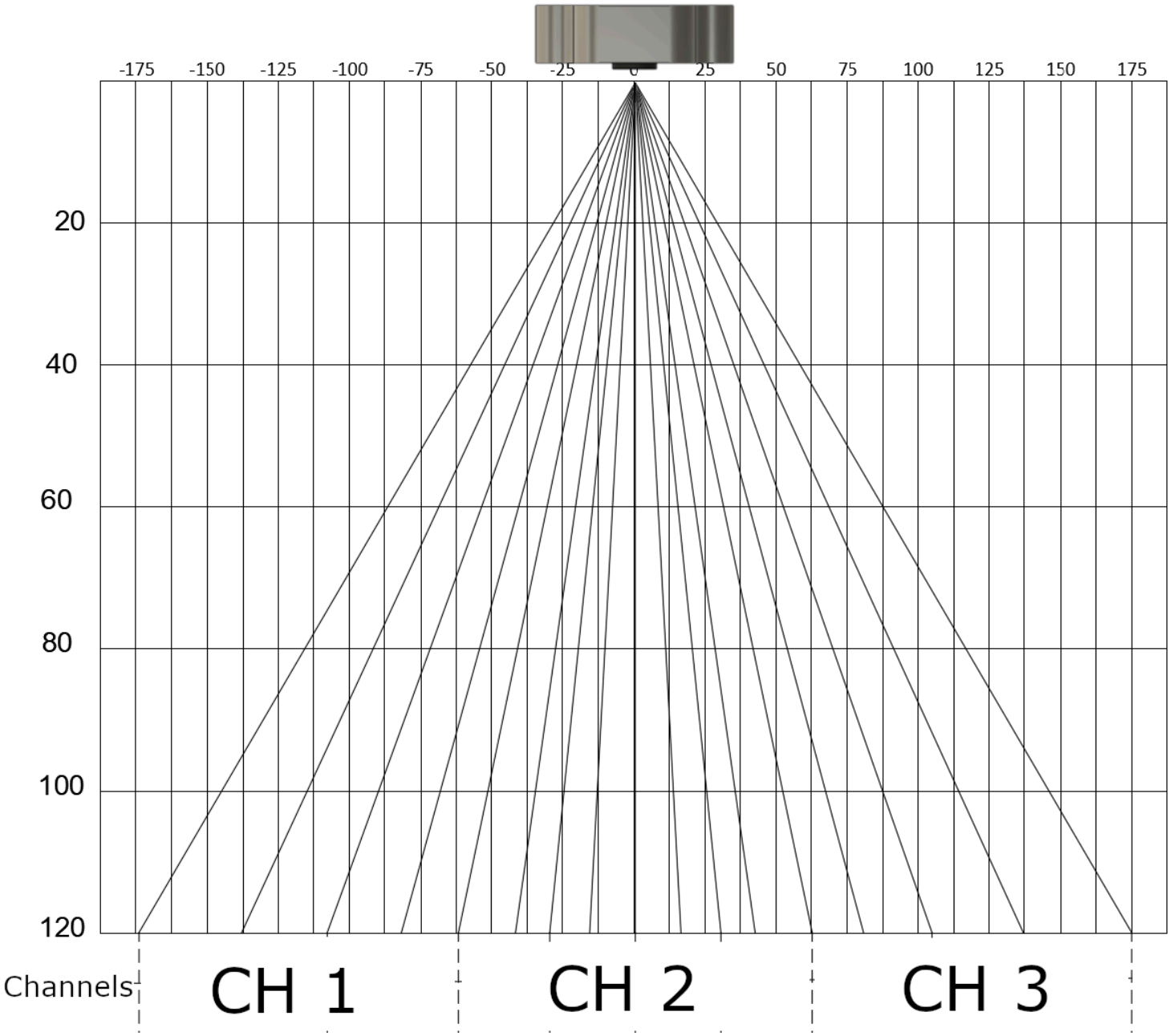

Figure 3 - Visual Representation of channel assignments

5. Mobile Installation

A. Harry's Lap Timer or GPS/OBD Buddy (iOS / Android)

Connecting to the device:

1. Download the latest version of the application.
2. If you have GPS/OBD Buddy, buy the Tires view add-on to be able to see the tire temperatures.
3. Open the application and go to the Tires view:

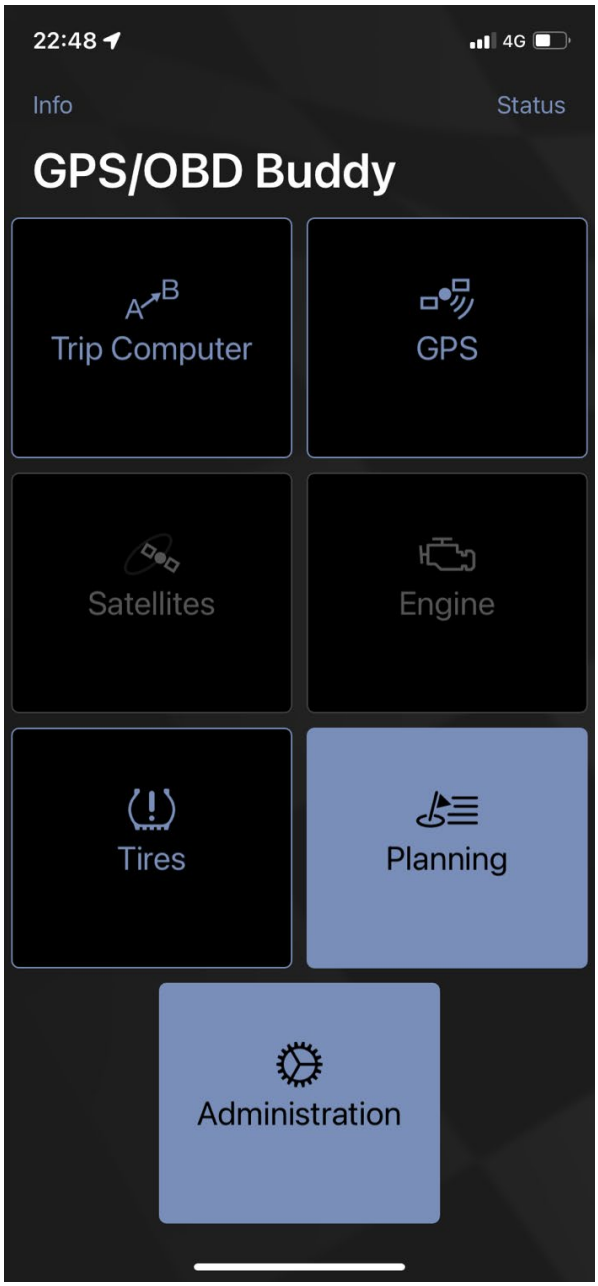

4. The device will connect automatically if powered-on:

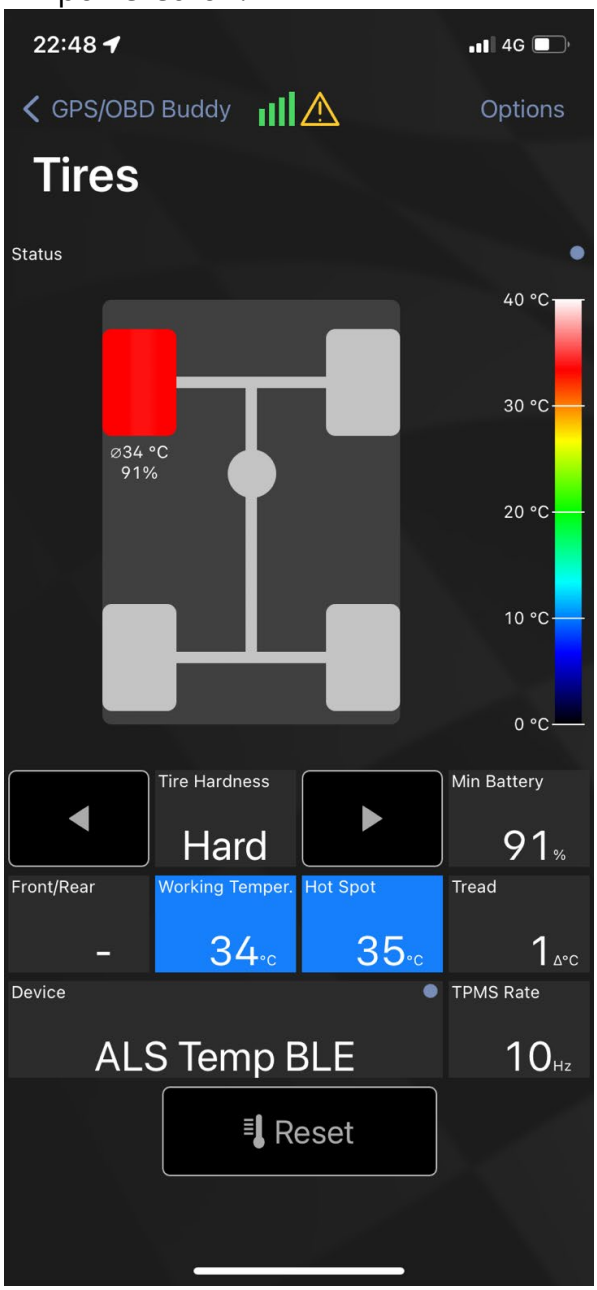

Configuring the device:

1. Go to Administration:

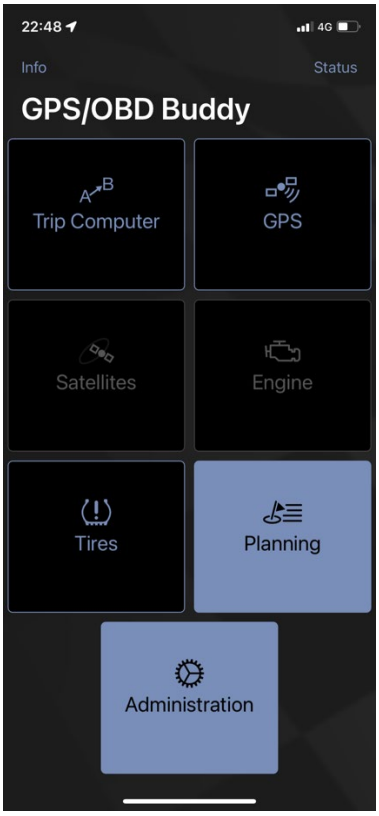

2. Go to Sensor List:

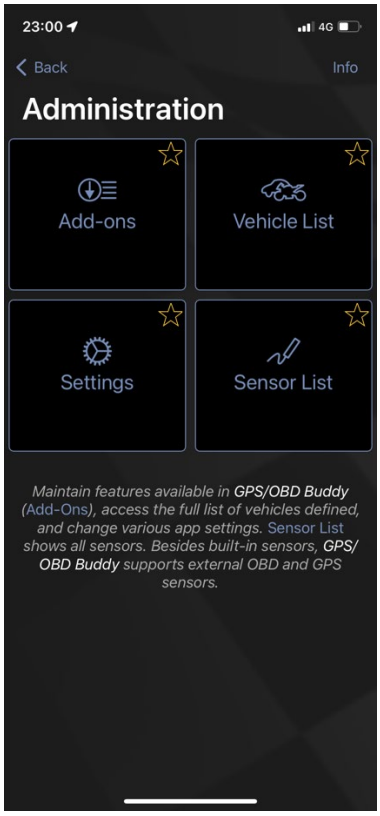

3. Click on the Alsense sensor:

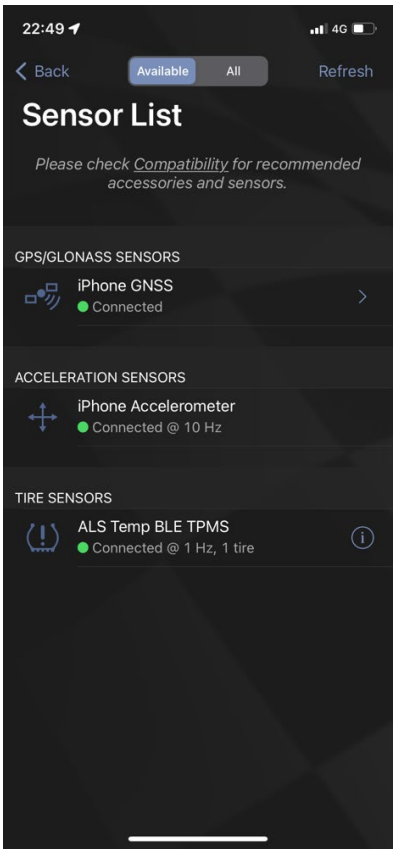

4. Modify the configuration and click Set.

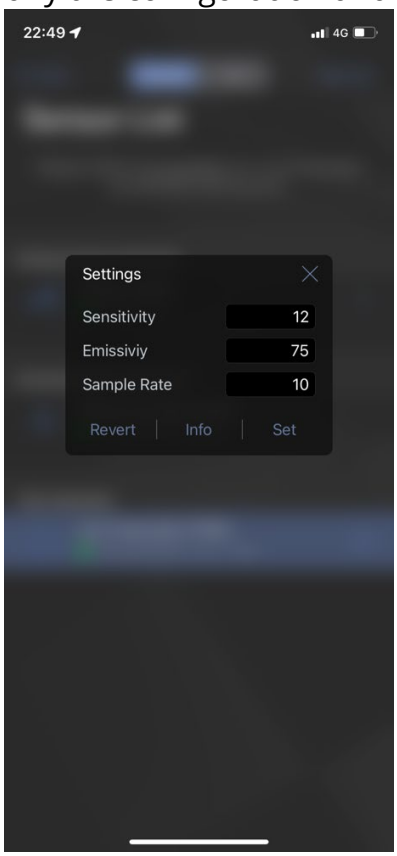

The Configuration is validated by the sensor, and if not valid it will not be applied. Check the Configuration section and the Appendix for more info about the valid values.

6. Operation & Charging

Each sensor has a 250mAh battery that can be charged using the built-in connector. When in use, it allows for up to 15 hours of track time.

Charging is done using the cables supplied from any USB port. External batteries can be used as well. A full charge takes around 90 minutes.

Preserving battery life when not in use – while active, the sensors continuously send data, draining the battery. When not in use, they can be deactivated by placing a magnet in a similar position to the ones in the charging dock. Alternatively, the sensors can be placed in their carrying case which has the magnets pre-fitted.

Demo units need to be placed in the charging dock or magnetically deactivated while charging!

7. Factory Reset

In some scenarios you might need to reset configuration parameters of the sensors. The following scenarios are instances when a factory reset is required:

- **Current settings are no longer working for you**

Factory resetting a sensor

- Ensure it is powered(STATUS LED has flashed blue and has turned off) and has enough battery life.
- Make sure no magnetic override is present.
- Press & hold the control button (S1) for around 10s.

8. Configuration

If you haven't requested a custom configuration for the sensors in your order, the **default** settings are as follows, along with a short description of what their function is:

Parameter	**Default Value**	**Function**
Emissivity	0.75	Lowering the emissivity

		increases the tire temperature. Suggested values depending on mounting distance: • 50mm – 0.86 • 150mm – 0.8 • 200 – 0.77 **Accepted values(1 is 0.01): 1-100**
Sample Rate	10 Hz	Sampling and reporting rate for the sensor. **Accepted Values: 1-10**
Sensitivity	12	Accelerometer sensitivity. **Accepted Values: 10-20**

9. Troubleshooting / FAQ

Situation 1: Mobile application does not find the device

a. Make sure the sensor has been fully charged.
b. Bring the sensor near the receiver. Try resetting it using the magnetic override.
c. Turn Off and then On the mobile Bluetooth. The BLE stack might be corrupted and this helps reset the stack.
d. Turn Airplane mode On and then Off on your mobile. The BLE stack might be corrupted and this helps reset the stack.
e. Try bringing it back to factory settings using the steps described in section **Factory Reset**

10. Support

Please make sure to check the downloads section of our support page as it provides the product's datasheet and configuration files for the most common CAN dashboards/loggers. Extra help can be obtained using our built-in ticket support system or directly via phone.

Downloads: https://www.alsense.eu/downloads/
Support Tickets: https://alsense.eu/osticket/ or email help@alsense.eu
Phone: +40 372 916 373

Appendix A: ALS Tire BLE

Bluetooth Communication Protocol
V2.0
Updated 23.01.2022

Overview

This document describes the communication protocol of the Alsense Tire Temperature Bluetooth low energy product.

Device Naming

The device name has the following convention: “ALS Temp BLE XXXXXX Y”. Where “XXXXXX” are the last 3 bytes of the MAC address and “Y” is the position(see configuration characteristic for more details).
Example: For MAC address “00:60:37:31:F7:B5“ and position “Rear Left”, the name will be: “ALS Temp BLE 31F7B5 3”.

Bluetooth Services and Characteristics

The board exposes a BLE service, for interacting with it, called “Temperature Service” . The Temperature Service has 2 characteristics: Temperature Characteristic and Configuration Characteristic.
The UUIDs for the services and the characteristics are:

Temperature Service	e10d0100-54da-44b3-9b70-9b9898e9ba43
Temperature Characteristic	e10d0101-54da-44b3-9b70-9b9898e9ba43
Configuration Characteristic	e10d0102-54da-44b3-9b70-9b9898e9ba43

Temperature Characteristic

The Temperature Characteristic is used to report battery and temperature data readings.
Characteristic Properties: Read/Notify

Configuration Characteristic

The Configuration Characteristic is used to change the board’s configurations.
Characteristic Properties: Read/Write/Notify

Current Protocol Version

The current protocol version is Version 2.

Protocol Version 2

Temperature Service

Temperature Characteristic Packet

Field	Size (bytes)	Description	Values
Protocol Version	1	The current protocol version.	2
Battery Level	1	The battery level in percentage.	0-100
Number of Channels	1	The number of channels.	1-3
Payload	32	The channel temperature values (Number of Channels x 2 bytes). Examples: - for 3 channels we will have a payload of 3 x 2 = 6 bytes and a padding of 26 bytes which are not used. - for 2 channels we will have a payload of 2 x 2 = 4 bytes and a padding of 28 bytes which are not used. Each value is stored in 2 bytes and it is sent as a signed short value. Each value has a multiplication factor of 10. Examples: - 33.5 will be encoded as 335. - 124.2 will be encoded as 1242. - -10.5 will be encoded as -105.	-32767 - +32767

The length of this packet is 35 bytes.
The usable packet length is 9(1 + 1 + 1 + 3 * 2) bytes. The rest of the bytes are not used, but might be used in future releases if the channel count increases.

Configuration Characteristic Packet

Field	Size (bytes)	Description	Values	Default Values
Protocol Version	1	The current protocol version.	2	2
Number of Channels	1	The number of channels.	1-3	3
Sample Rate	2	The sample rate in Hz.	1-10	10 (when waiting for movement the value is always 1)
Sensitivity	2	The accelerometer sensitivity.	10-20	12
Emissivity	2	The temperature infrared sensor emissivity(in .01 increments).	1-100	75
Sensor Position	1	Position of the sensor. One of: 1 - Front Left 2 - Front Right 3 - Rear Left 4 - Rear Right	1-4	1
Unused	11	Reserved for future use.	N/A	N/A

The length of this packet is 20 bytes.
The device checks the configuration ranges and rejects the configuration change if the values are not in the ranges from the table from above.

For more details visit our website.